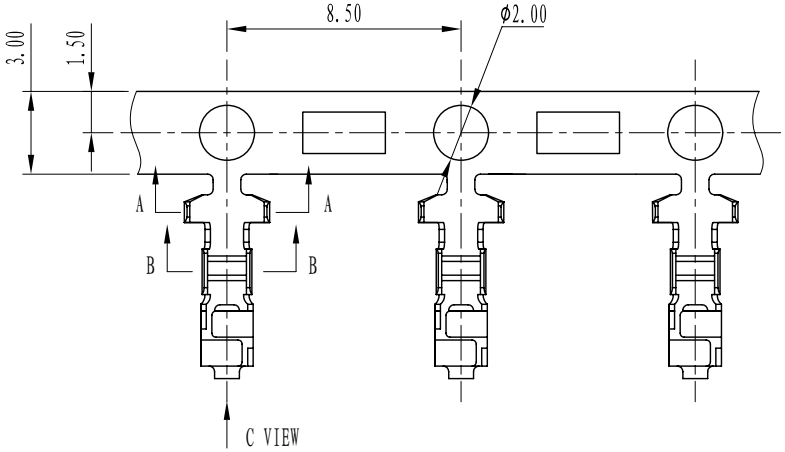

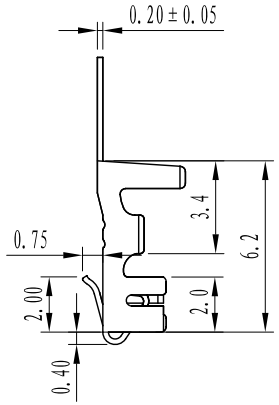

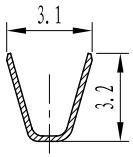

A-A

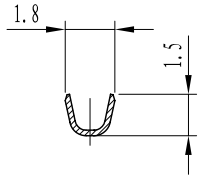

B-B

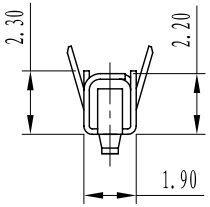

C VIEW

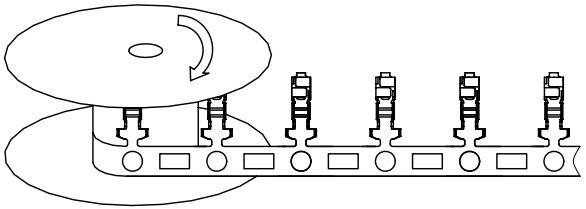

Packing draw

ⓐ Performance characteristics:

ⓑ 1. Main body part material

Contact terminal: Phosphor bronze, 1.27μm Ni under plated, outer plating see part number rule

2. Electrical requirements:

Current rating: 3 A

Voltage rating: 250 V

Contact resistance: ≤10 mΩ

3. Mechanical requirements

Insertion force: ≤15 N/pin (Use 0.64mm square pin)

Extraction force: ≥0.5 N/pin (Use 0.64mm square pin)

Wire gauge: AWG22~28

ⓒ 4. Environment specification

Working temperature: -40℃~+105℃

5. Packing & storing

Number of packing: 7000pcs/reel

Method of packing: Paper reel

Storing condition: temperature of -10℃~+40℃ below 80% relative humidity

6. Style of installation: With the female housing assembly

7. To prevent the pollution of the environment product info

RoHS agreement: Content

e343 - X-XXX

Series Code

Character Code	
Code	Definition
3	Terminal

Production Code	
Code	Definition
001	Sn 3~5μm
ⓑ 002	Contact Area Au0.38μm, Other Area Gold Flash.

Unless otherwise specified tolerance:

X.	±0.50	X.°	±3°
.X	±0.38	.X°	±2°
.XX	±0.25		

Mark	NO.	File NO.	Signature	Date
ⓒ	1	SN-00003561	An. Cheng	2014.04.18
ⓑ	2	SN-00000299	An. Cheng	2010.10.18
ⓐ	1		J.A	2009.03.31

DRAW	J.A 2009.02.03
CHK	Alan2014.4.26
MAN	Eva2014.4.28
STD	ZhiJian Jiang2014.4.28
APP	

2.50mm Wafer female terminal

e3433xxx

wrj-e343

Projection	Rev.	Weight	Scale
	A3		

Sheet 1 | 1 of 1

深圳市威尔杰电子有限公司